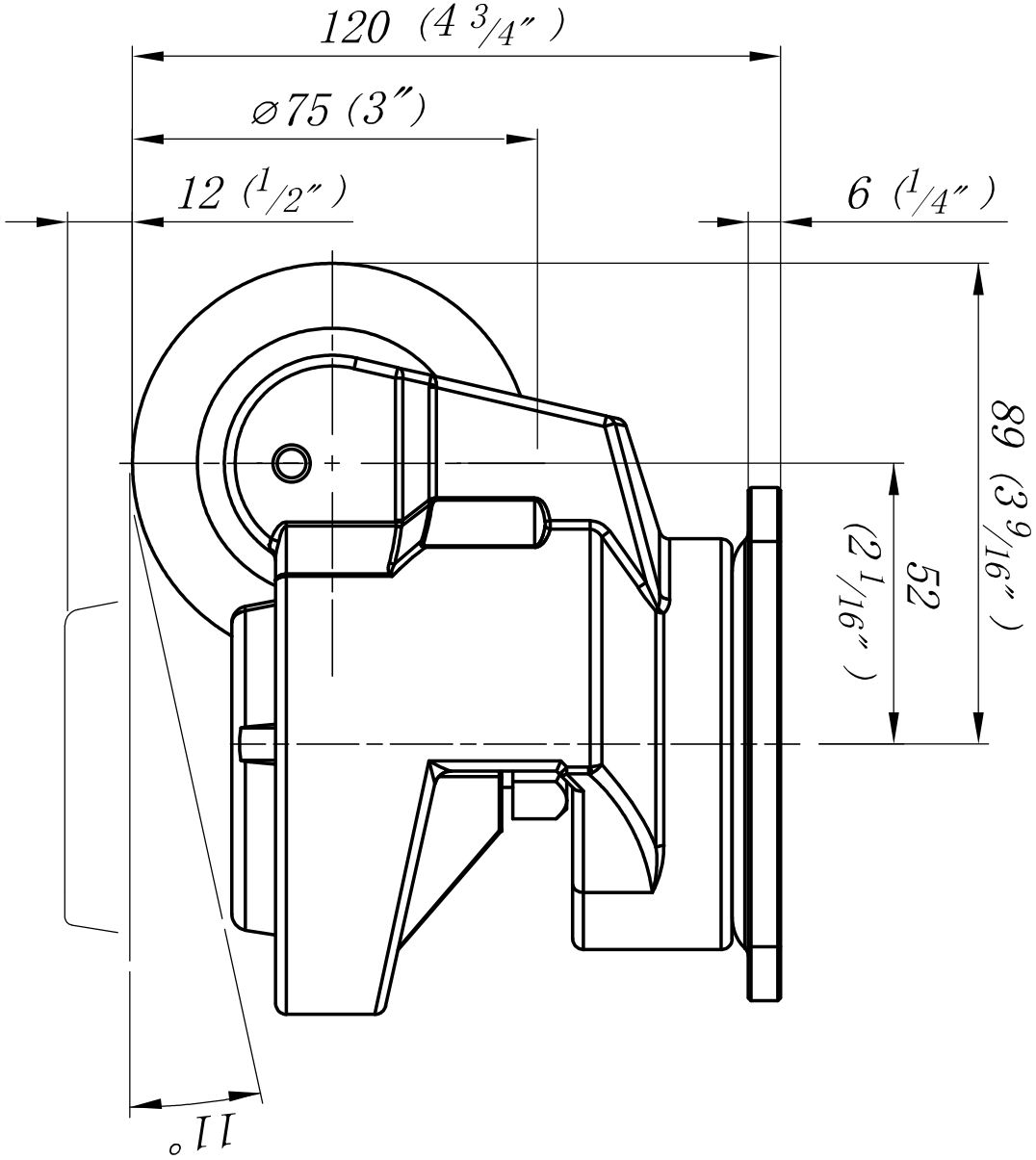
120 (4 3/4″)
⌀75 (3″)
12 (1/2″)
6 (1/4″)
89 (3 9/16″)
52 (2 1/16″)
11°

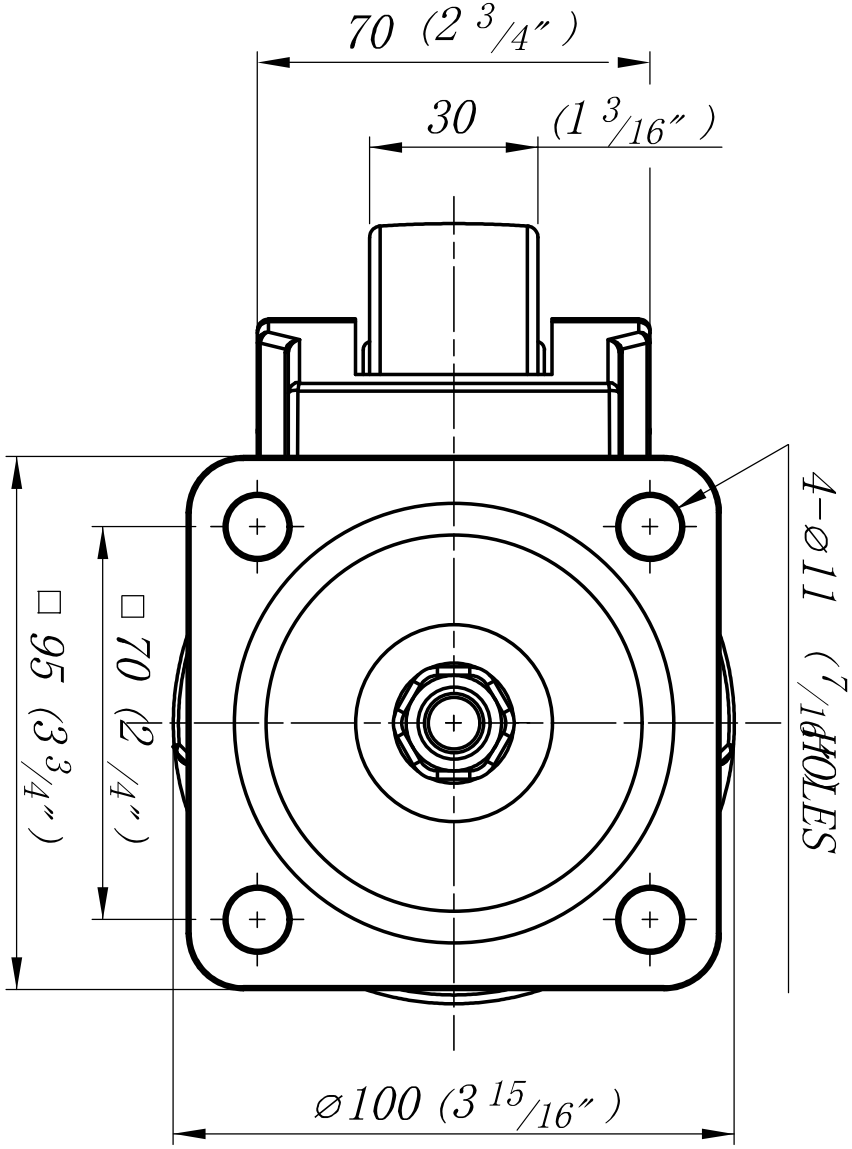
70 (2 3/4″)
30
(1 3/16″)
4-⌀11 (7/16″) HOLES
□ 95 (3 3/4″)
□ 70 (2 3/4″)
⌀100 (3 15/16″)